ACTUAL SIZE

IDENTIFIER

CAR30NYL63

tradebase.au

Print the PDF on A4 with Scale set to 100% (Actual size) - not Default, Fit to page or Shrink to fit.

Printing a web image instead of the PDF will not come out to scale.

Hold your existing part against the outline below. Each grid square is 10 x 10 mm.

This bar must measure exactly 100 mm.

If it does not, the printer has scaled the page - reprint at 100%.

0 mm 50 mm 100 mm 150 mm

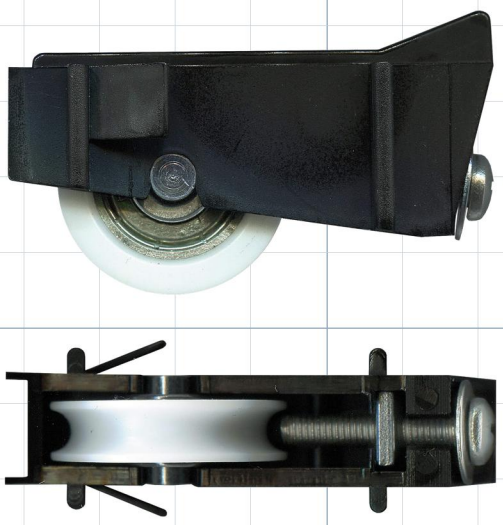

Sliding Door Carriage & Acetal Roller – Adjustable Nylon – Suits BGC® & Jason®

1:1 SCALE

Largest view 65 x 38 mm. 2 views shown at true size.

Grid squares are 10 mm